D2001 NX

2B1Q – 4B3T ISDN BRI TESTER

BRI ISDN
Euro-ISDN Standards

Smart troubleshooting tool
Powerful background monitor

Ideal for first installation problems
Automatic line checking for all ISDN layers

OVERVIEW

With D2001NX, Aethra® intends to answer the problems which occurs working on ISDN Basic Rate lines. Thanks to its using simplicity due to a very intuitive GUI (Graphic User Interface), D2001NX makes extremely easy installing and troubleshooting operations also for ones who have little knowledge about ISDN lines.
Its advanced design, the protective holster and the compact and ergonomic structure, allow an optimal use of the device in every type operation.

The D2001NX presents a graphic interface common to the whole test equipments family of new generation made by Aethra® so, it is possible the use of the entire equipment range as the navigation procedures through the various menu remain unchanged. That easy navigation, is also due to the bright, back-lit and high resolution display and to the zoom feature which allows to highlight all the useful information.

The features PREDEFINED TESTS and HISTORY, allow respectively the management of personalized test setup and to recall the results of each test performed. This simplify hugely the technician daily tasks by avoiding possible setup errors or subsequent analysis of the results obtained.

All the information necessary to verify the line status and the possible presence of troubles on the line, is now within a button's reach, thanks to the immediate access to Smart Status™ feature.
The access to such a feature is always available also during the test in progress, allowing so to have always under control monitoring over layer 1, 2 and 3, alarms, errors, channel configurations and the test settings, as well as the device status itself.

FEATURES AT A GLANCE

- ☐ ISDN lines trouble-shooter essential for installing operations
- ☐ Predefined test set-ups to save time on site
- ☐ Possibility to save test results for later analysis
- ☐ ETSI Euro-ISDN standard network interfaces 2B1Q and 4B3T (different ordering codes)
- ☐ Onboard multi protocol analysis including full frames decoding
- ☐ Includes PC108 for Windows™ software for powerful analysis and remote management
- ☐ Onboard multi language GUI
- ☐ In field upgradable firmware

MONITOR

The device captures and decodes both in real time and off-line the main communication protocols over D channel. The onboard decoding allows to analyze traces directly at the user's site.
The advanced analysis through the PC software[1] issued with the device, helps to solve also more complex problems regarding ISDN
The feature is available both as high impedance monitor and simulator.

- D channel monitor
- E-DSS1,1TR6,X.25,VN4,Q.SIG,DASS2, DPNSS, CorNet®
- Capturing filters
- Statistics information
- Communication protocol monitor and audio in NT1 mode[2]

X.25

D2001NX is able to realize an X.25/X.31 connection over D channel and verify the quality of the line.
The statistics help to check out the real band of the connection and possible net congestion problems.

- D channel X.25/X.31 support
- DTE and DCE simulation
- Programmable transmission throughput
- Variable data packet length
- Traffic statistics

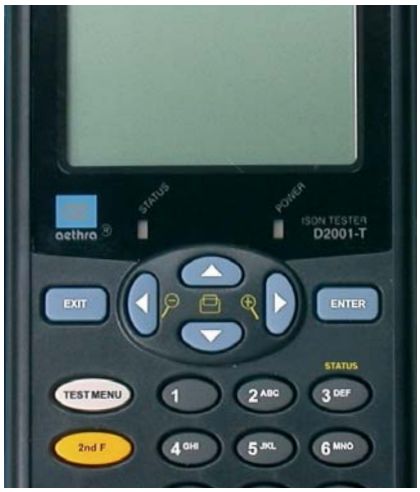

BER

D2001NX performs quality tests (Bit Error Rate) over ISDN and Leased lines and provides results valuation according to G.821 standard

- G.821
- Multi test pattern
- Test modes End-to-End and Selfcall
- 2B mode
- Bearing physical layer quality test
- Multiple measurement cycles

MAKE A CALL

Using the multi-functional make a call test, it is possible to verify the correct operation of the several supplementary services supplied by provider, such as AOC, CF, CLI, 3PTY and all the other common ones.
People who work with PABX will find very useful the possibility to generate more calls simultaneously with several numbers and profiles; making the devices setting up faster and very functional.
In order to solve the problems concerning data connection such as video-conferencing, the test makes available the round trip delay of B channel in milliseconds.
Integrated microphone and loudspeaker, allow to use the device also as a normal ISDN or POTS[5] telephone.

- ETSI supplementary services check and support
- B channel round trip delay
- Multiple profiles (Speech, Data, Fax,..)
- B channel connected to incorporated microphone and loudspeaker or external handset
- ISDN and POTS simulation

GENERATE TRAFFIC

This traffic simulation permits to verify the call management capabilities on behalf of the user system (PABX) or of the net.
The simulated load, may be programmed by quantity of calls to perform and duration time.
Up to 999 failures are stored reporting causes and times.

- Programmable time between calls
- Maximum 65000 test cycles
- Settable minimum call duration
- Test cycles on connection or B channel notification

AUTOMATIC TESTS

This test is used to verify immediately and automatically the ISDN line under measurement.
If not otherwise specified, the device automatically generates a series of calls toward a remote user or in autocall mode and verifies the complete status of the line.
With the possibility to set up and save a personalized test sequence, the control of several line typologies is easier and more immediate.

- It is possible to set a complete automatic test or set manually layers or services to verify
- Physical layer settings control
- Layer 2 configuration
- Availability status of the several bearer services, teleservices and supplementary services
- Availability check of single B channels
- TEI detection for X.25(X.31) service

MISCELLANEOUS

The device owns a powerful automatic answering feature to incoming calls.
The technician can set such feature in order to be able to filtering acceptable incoming calls, performing a loop over data or a call back toward the calling user.
The device can completely substitutes the NT[1], providing the phantom power over S/T Bus so as to verify the user's terminal (TE)[2] correct working.

- Loopbox
- Call back
- Feed power from S/T-Bus or U-Bus
- S/T-Bus wiring test
- NT[2] Simulation

[1] PC108 for Windows™
[2] TT2001
[3] AB2001N

TECHNICAL SPECIFICATIONS

TELECOM INTERFACES

• Basic Rate Access	
S/T	ITU-T (CCITT) Rec.I.430, ETS 300 012
U	ITU-T (CCITT) Rec.I.430, ETS 300 012 2B1Q (D2001-Q)[1] or 4B3T (D2001-T)[2] TS 102 080 [1-2]Only one module at time is available from the factory

PROTOCOLS SUPPORTED

• Simulation mode	EDSS-1, Q.SIG, 1TR6, TN1R6®, VN4, X.25 over D channel, CorNet®-N, -T
• Monitor mode	EDSS-1, Q.SIG, 1TR6, TN1R6®, VN4, X.25, CorNet®-N, -T
• Other protocols available by PC	

OPERATING MODES AVAILABLE

• BRI TE-S	
• BRI MON-S	
• BRI NT-S	TT2001Option
• BRI NT-U	
• BRI NT1	TT2001 Option
• BRI S /T-Bus wiring test	WT2001 Option
• POTS TE	AB2001N Option
• POTS MON	AB2001N Option

SMART STATUS™

• Physical layer	All physical Layer relevant information
• ISDN line	Status ISDN layers 1, 2 and 3 clearly diplayed
• B channels	All B channel relevant information

BACKGROUND MONITOR

• Modes	High impedance and during simulation
• Complete protocol analysis on-board	
• Programmable filters	Independent filters capture and displaying
• Statistics information	
• Analysis of results stored into PC	PC108 for Windows™

ADVANCED LOOP-BOX FEATURES

AUTOMATIC ACCESS TEST

- Fully automated Access test
- Supplementary services automatic test
- Programmable test sequence

BIT ERROR RATE TEST

• G.821 statistics	ES, SES, US, DM, PASS/FAIL, S-LOSS
• Pseudo-Random bit sequences	User definable 2^{11-1}, 2^{15-1}, 2^{23-1}, 16 bits octet
• Error Injection	User selectable, manual, automatic, single

GENERATE TRAFFIC

• Number of cycles	Up to 65535
• Number of parallel calls	Up to 2

X.25 OVER D CHANNEL

• Modes	DTE, DCE

HISTORY AND PREDEFINED TESTS FEATURES

- Saving and recalling of 10 different setup and results for each kind of test

CONNECTORS

• S/T Basic Access interface	RJ45 (ISO 8877)
• U Basic Access interface	RJ45 (ISO 8877)
• RS232	Mini - DIN 4 (ISO 4902)
• Handset	4 wires RJ9
• Power in	External AC/DC adapter 4 wires

SIMULATION MODES

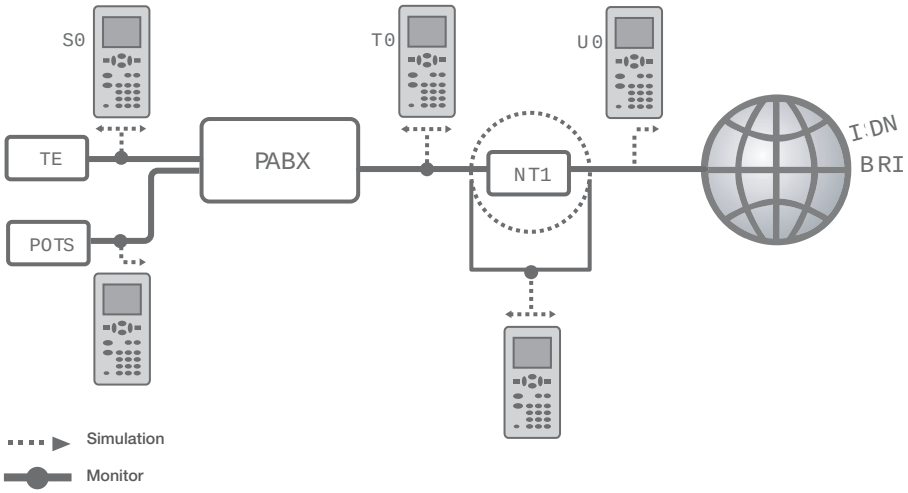

ENVIRONMENTAL CHARACTERISTICS

• Dimension	
Weight, with battery	≈ 500 gr.
Dimensions, with holster (mm)	100 (w) x 180 (l) x 50 (d)
• Power	
Battery Type	Rechargeable, Ni-MH.
Battery life	≈ 6 hours, @ 25°C, LCD back-lit off, without power from S/T-Bus or U-Bus
• External AC/DC adapter	115/230Vac ±10% @ 50/60Hz

TEMPERATURE

Storage/Transport	-40°C to +70°C
Operating, nominal	-5°C to +45°C
Operating, limits	-10°C to +55°C
• Humidity, non-condensing	≤ 93% RH @ 40oC ≤ 70% RH @ 55oC
• User's Safety Aspects	EN 61010-1, EN 60950 EN 41003
• EMC Aspects	EN 55022, EN 55024, EN 61000-3-2 / -3-3
• CE Marking	Class B (residential devices)

MISCELLANEOUS

• LCD display	320x200 Graphic display wide bright and back-lit, with Zoom function

- Internal microphone & loudspeaker
- Upgradable firmware

Aethra SpA
Telecommunications
via Matteo Ricci 10
60020 Ancona - Italy
Telephone +39.071.218981
Fax +39.071.887077
Video 1 +39.071.2189160
Video 2 +39.071.2189701
Email: info.aethra@aethra.com
www.aethra.com

Aethra, Inc.
701 Brickell Avenue
Suite 1390
Miami, FL 33131 USA
Telephone +1.305.375.0010
Toll Free (US only) 1.888.4.AETHRA
Fax +1.305.375.0655
Video +1.305.577.3524
Email: info.na@aethra.com

Code 071062008GB Rev.0 (06/03)